Proposal for HOTWORX Operational Adjustments

Thank you for the opportunity to discuss the conditions for HOTWORX, a 24-hour infrared sauna fitness studio. We aim to operate according to the national HOTWORX model, which includes round-the-clock access for members. I understand there is an ordinance in place allowing gyms to operate 24 hours unmanned, except when saunas are involved. As saunas are the core equipment in our facility, we recognize the need for special conditions and have implemented robust safety measures that align with this requirement. Below, I propose modifications to the current conditions to reflect our specific operations.

Current Condition 1.
At least one employee or manager, trained and qualified in first aid and CPR, shall be on duty at all times when the licensed premises are in operation or open to the public.

Proposed Update:
HOTWORX provides 24-hour security through surveillance systems, and a personal emergency response system is available for members who choose to wear emergency buttons, allowing them to directly contact emergency services if needed. The local police department also has 24-hour access to our security cameras. Our staff is scheduled during peak traffic hours, ensuring trained personnel are present during busy times. Additionally, when members sign up, they receive training on the safe use of all equipment, including our saunas, and sign a waiver. This system ensures the safety of members while still providing the flexibility of 24-hour access.

Current Condition 2:
No exercise equipment shall be used unless there is an employee on duty who is trained to advise on the safe use of the equipment.

Proposed Update:
HOTWORX saunas are the primary equipment, and members are trained on safe use during their initial sign-up. Virtual, instructor-led workout sessions guide members 24/7, with safety instructions included in each session. Staff are present during peak hours for additional assistance. This combination of virtual guidance and initial training ensures member safety even when staff are not on-site.

Current Condition 3:
The licensee agrees to ensure that only registered members are permitted access to the facility during non-office hours, and non-members may access the space only during office hours.

Proposed Confirmation:
We strictly enforce this policy, using an advanced entry system to ensure only registered members can access the facility during non-staffed hours. Non-members can only visit during staffed hours for tours or information. This entry system complies with the business plan on file with the Department of Safety and Inspections.

Labels 1 to 5 6 to 10 11 to 20 21 to 30 31 to 40 41 to 50 51 to ...

Date	Day	Total Count	12am	1am	2am	3am	4am	5am	6am	7am	8am	9am	10am	11am	12pm	1pm	2pm	3pm	4pm	5pm	6pm	7pm	8pm	9pm	10pm	11pm
01-May	Monday	149	0	0	0	1	1	3	15	6	3	10	3	2	4	3	13	14	16	13	20	10	6	3	1	0
02-May	Tuesday	140	0	0	1	1	2	5	15	5	6	12	6	9	5	1	4	9	13	9	19	6	3	7	1	0
03-May	Wednesday	127	0	0	0	0	0	5	6	4	7	14	6	6	4	3	0	15	8	14	16	4	10	4	1	0
04-May	Thursday	135	0	0	0	0	0	2	10	7	10	9	5	11	6	5	9	8	11	12	15	5	6	4	0	0
05-May	Friday	97	0	0	0	0	3	2	12	6	8	4	6	6	3	3	1	8	8	5	9	4	6	3	0	0
06-May	Saturday	80	2	0	0	0	0	1	3	0	4	15	6	7	11	7	6	2	5	0	1	3	1	1	1	0
07-May	Sunday	59	1	0	0	0	0	0	1	0	6	15	8	9	7	4	1	4	3	2	4	4	0	2	0	0
08-May	Monday	145	0	0	0	0	2	6	8	6	9	14	5	7	6	4	4	9	11	12	18	8	9	5	2	0
09-May	Tuesday	129	0	0	0	0	3	4	12	2	11	11	1	5	2	1	5	14	8	13	20	8	4	6	1	0
10-May	Wednesday	134	0	0	0	1	5	2	13	9	10	10	3	10	4	5	2	8	4	10	12	8	7	8	3	0
11-May	Thursday	90	0	0	0	2	6	0	7	3	4	8	5	4	5	2	1	6	2	15	8	0	5	7	0	0
12-May	Friday	71	0	0	0	0	2	2	7	9	5	8	4	3	4	1	2	6	7	6	1	0	2	2	0	0
13-May	Saturday	46	0	0	0	0	0	1	1	3	6	9	1	3	4	0	5	2	5	0	0	5	0	1	0	0
14-May	Sunday	70	2	0	0	0	0	1	0	2	5	12	3	4	3	3	4	1	8	4	3	2	8	4	0	0
15-May	Monday	127	0	0	0	0	4	7	7	4	6	13	4	3	5	3	3	3	12	7	16	3	4	7	2	0
16-May	Tuesday	127	0	0	0	0	0	2	4	2	7	7	2	12	6	3	3	10	16	12	20	3	7	6	0	0
17-May	Wednesday	136	0	0	0	0	4	4	11	8	15	18	3	3	5	1	1	10	11	12	19	5	1	1	3	1
18-May	Thursday	85	0	0	0	0	0	4	8	4	3	3	3	7	4	3	4	10	9	6	10	0	0	2	2	0
19-May	Friday	82	0	0	0	0	2	3	6	6	8	9	2	5	2	2	0	9	8	3	7	4	5	3	2	0
20-May	Saturday	80	0	0	0	0	0	0	4	5	9	10	3	3	14	11	4	3	5	1	2	3	2	4	0	0
21-May	Sunday	54	0	0	0	0	0	0	5	1	2	1	3	3	9	6	4	7	5	2	1	0	3	2	0	0
22-May	Monday	119	0	0	0	0	1	1	6	4	9	9	6	3	2	2	2	5	6	7	14	9	10	6	2	0

The Gaston & Davis
HOTWORX Studio
St. Paul, MN

DRAWING INDEX

1- COVER SHEET
2- EXISTING AND PROPOSED PLAN
3- WALL SECTIONS AND DETAILS
4- ELECTRICAL PLAN
5- LIGHTING PLAN
6- INTERIOR ELEVATIONS
7- FLOORING PLAN
8- SECURITY PLAN

NOTE:
DO NOT REMOVE SECURITY PACKAGE SHEET FROM ARCHITECTURAL DRAWINGS OR IT WILL CAUSE DELAYS AND/ OR ADDED EXPENSES

VICINITY MAP

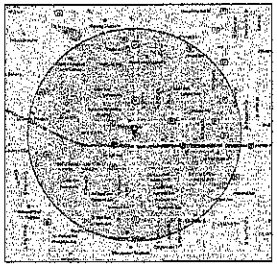

ALL DRAWINGS ARE PROVIDED FOR USE OF STUDIO OWNER FOR THE PURPOSE OF SPACE ALLOCATION. HOTWORX LLC IS NOT AN ARCHITECTURAL OR MECHANICAL FIRM AND CLAIMS NO RESPONSIBILITY IN SUPPLYING OWNER W/ PERMIT PLANS. ALL MECHANICAL & ELECTRICAL SPECIFICATIONS SHOULD BE DONE BY A LICENSED PRACTITIONER. DO NOT UNDER ANY CIRCUMSTANCES SCALE DRAWINGS. FIELD VERIFY ALL MEASUREMENTS AT THE SITE BEFORE EXECUTION AND NOTIFY HOTWORX OF ANY DISCREPANCIES BETWEEN THESE PLANS & ACTUAL CONDITIONS.

* ALL DIMENSIONS ARE CRITICAL.
* ALL ELECTRICAL, MECHANICAL & PLUMBING WORK TO BE BY LICENSED PRACTITIONERS.
* ALL WALLS & STRUCTURAL CHANGES BY GENERAL CONTRACTOR MUST BE NOTIFIED TO HOTWORX LLC

HOTWORX

ALL DRAWINGS ARE PROVIDED FOR USE OF STUDIO OWNER FOR THE PURPOSE OF SPACE ALLOCATION. HOTWORX LLC IS NOT AN ARCHITECTURAL OR MECHANICAL FIRM AND CLAIMS NO RESPONSIBILITY IN SUPPLYING OWNER W/ PERMIT PLANS. ALL MECHANICAL & ELECTRICAL SPECIFICATIONS SHOULD BE DONE BY A LICENSED PRACTITIONER. DO NOT UNDER ANY CIRCUMSTANCES SCALE DRAWINGS. FIELD VERIFY ALL MEASUREMENTS AT THE SITE BEFORE EXECUTION AND NOTIFY HOTWORX OF ANY DISCREPANCIES BETWEEN THESE PLANS & ACTUAL CONDITIONS.

* ALL DIMENSIONS ARE CRITICAL.
* ALL ELECTRICAL & PLUMBING WORK TO BE BY LICENSED PRACTITIONERS.
* ALL WALLS & STRUCTURAL CHANGES BY GENERAL CONTRACTOR MUST BE NOTIFIED TO HOTWORX LLC

REVISION

DATE	INIT.

CONTACTS

Contact Development Team
HOTWORX Franchising
development@hotworx.net

PROJECT

Natalie Gaston & Heidi Davis
HOTWORX STUDIO - NNO092
493 Snelling Ave. N
St. Paul, MN 55104
02-28-2024

HOTWORX.

SCALE
NOT TO SCALE

DATE
02/28/2024

DRAWN BY
DEBBIE T.

DRAWING TITLE
COVER SHEET

SHEET NO.
1 OF 8

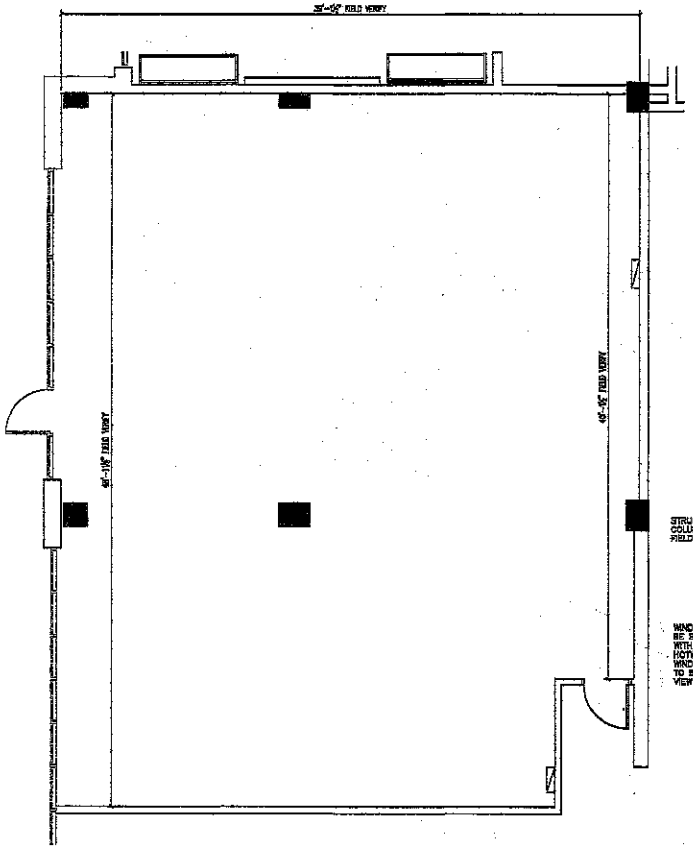

EXISTING FLOORPLAN
SCALE 1/4"=1'-0"

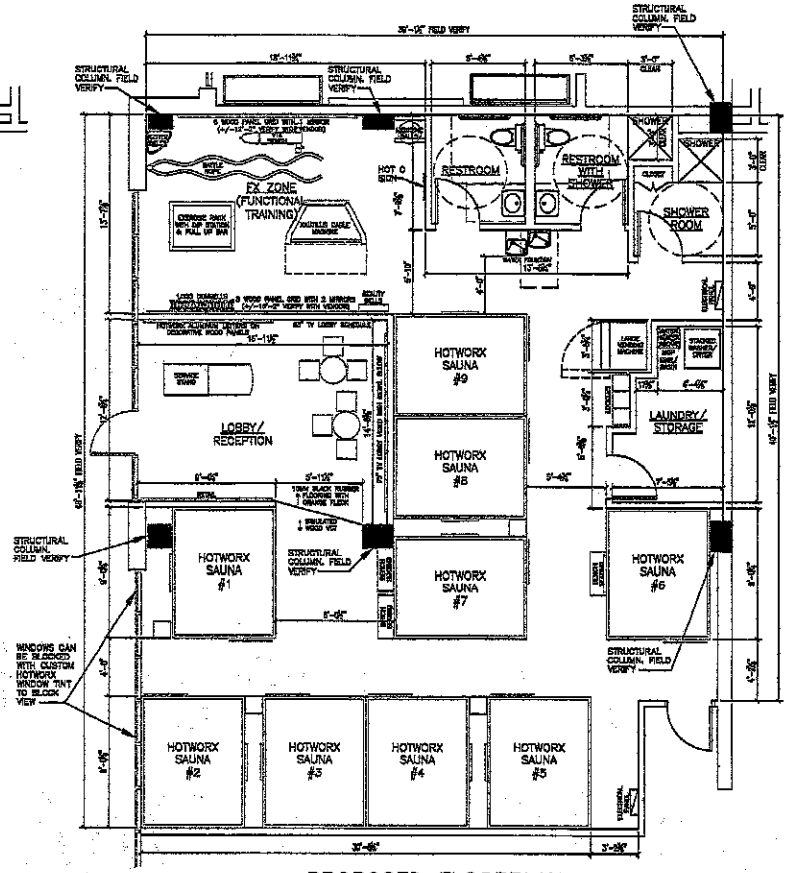

PROPOSED FLOORPLAN
SCALE 1/4"=1'-0"

GENERAL NOTES

1. ALL WORK SHALL CONFORM TO CITY OF LOCATION, FEDERAL, STATE AND LOCAL CODES.
2. THE CONTRACTOR SHALL OBTAIN ALL NECESSARY PERMITS AND SHALL PAY ALL REQUIRED FEES FOR THIS WORK.
3. THE CONTRACTOR SHALL FIELD VERIFY EXISTING CONDITIONS AND REPORT TO HOTWORX, IN WRITING, ANY DISCREPANCIES IMMEDIATELY UPON DISCOVERY. DO NOT UNDER ANY CIRCUMSTANCES SCALE DRAWINGS.
4. UNLESS OTHERWISE NOTED ALL TELEPHONE, ELECTRICAL OUTLETS SHALL BE LOCATED 18" ABOVE THE FINISHED FLOOR.
5. UNLESS OTHERWISE NOTED, DIMENSIONS FOR ALL NEW WORK ARE MEASURED FROM FACE OF FINISHED WALL. DIMENSIONS REFERRING TO EXISTING WORK ARE MEASURED FROM FACE OF EXISTING FINISH.
6. EXISTING WALLS TO REMAIN, SHALL BE REPAIRED AND REFINISHED AS REQUIRED TO PROVIDE A SMOOTH AND UNIFORM SURFACE FOR THE APPLICATION OF NEWLY INDICATED FINISHES.
7. THE CONTRACTOR SHALL, AT ALL TIMES, KEEP THE PREMISES FREE FROM ACCUMULATION OF WASTE MATERIALS OR RUBBISH CAUSED BY THE WORK. AT THE COMPLETION OF THE WORK CONTRACTOR SHALL REMOVE ALL WASTE MATERIALS AND RUBBISH FROM AND ABOUT THE PROJECT AS WELL AS ALL TOOLS, CONSTRUCTION EQUIPMENT AND MACHINERY.
8. ALL SURPLUS EQUIPMENT AND MATERIALS ARE THE PROPERTY OF THE OWNER. THE CONTRACTOR SHALL COORDINATE WITH THE OWNER THE DISPOSAL OF ANY AND ALL SURPLUSES.
9. ALL WORK SHALL BE PERFORMED IN A MANNER AND AT A TIME WHICH LEAST DISRUPTS THE BUSINESS PROCEDURE OF ANY PRESALE AREAS OR NEIGHBORING BUSINESSES.
10. THE CONTRACTOR SHALL INDIVIDUALLY WARRANT FOR THE ONE YEAR ALL MATERIALS AND WORKMANSHIP EXCEPT OTHERWISE AGREED.
11. ELECTRICAL, MECHANICAL & PLUMBING SHALL BE BIDDER DESIGNED.
12. RESTROOM TO BE HANDICAP ACCESSIBLE AS REQUIRED BY ADA REGULATIONS.
13. GENERAL CONTRACTOR TO PROVIDE PROPER VENT FOR CLOTHES DRYER.
14. ELECTRICIAN TO PROVIDE ALL EXIT & EMERGENCY LIGHTING AS REQUIRED BY CODE.
15. INTERIOR WALL WILL BE METAL OR WOOD STUD AND SHEETROCK TYPICAL. ARCHITECT AND GENERAL CONTRACTOR TO VERIFY ALL DIMENSIONS ON JOB.
16. PROVIDE FLOOR DRAIN IN STORAGE/LAUNDRY AND RESTROOMS IF REQUIRED.
17. PROVIDE AIR CIRCULATION WHERE TELECOMMUNICATION DATA AND SECURITY EQUIPMENT ARE LOCATED.

**THIS DRAWING IS APPROVED CONTINGENT UPON THE FOLLOWING:
-THE DIMENSIONS ARE TRUE AND ACCURATE
-THE RESTROOMS AND HALLWAYS MAINTAIN REQUIRED ADA CODE AND SAFETY STANDARDS

* ALL DRAWINGS ARE PROVIDED FOR USE OF STUDIO OWNER FOR THE PURPOSE OF SPACE ALLOCATION. * HOTWORX LLC IS NOT AN ARCHITECTURAL OR MECHANICAL FIRM AND CLAIMS NO RESPONSIBILITY IN SUPPLYING OWNER W/ PERMIT PLANS.
* ALL MECHANICAL & ELECTRICAL SPECIFICATIONS SHOULD BE DONE BY A LICENSED PRACTITIONER. DO NOT UNDER ANY CIRCUMSTANCES SCALE DRAWINGS. FIELD VERIFY ALL MEASUREMENTS AT THE SITE BEFORE EXECUTION AND NOTIFY HOTWORX OF ANY DISCREPANCIES BETWEEN THESE PLANS & ACTUAL CONDITIONS.
* ALL DIMENSIONS ARE CRITICAL.
* ALL ELECTRICAL, MECHANICAL & PLUMBING WORK TO BE BY LICENSED PRACTITIONERS.
* ALL WALLS & STRUCTURAL CHANGES BY GENERAL CONTRACTOR MUST BE NOTIFIED TO HOTWORX.

HOTWORX

ALL DRAWINGS ARE PROVIDED FOR USE OF STUDIO OWNER FOR THE PURPOSE OF SPACE ALLOCATION. HOTWORX LLC IS NOT AN ARCHITECTURAL OR MECHANICAL FIRM AND CLAIMS NO RESPONSIBILITY IN SUPPLYING OWNER W/ PERMIT PLANS.
* ALL MECHANICAL & ELECTRICAL SPECIFICATIONS SHOULD BE DONE BY A LICENSED PRACTITIONER. DO NOT UNDER ANY CIRCUMSTANCES SCALE DRAWINGS. FIELD VERIFY ALL MEASUREMENTS AT THE SITE BEFORE EXECUTION AND NOTIFY HOTWORX OF ANY DISCREPANCIES BETWEEN THESE PLANS & ACTUAL CONDITIONS.
* ALL ELECTRICAL & PLUMBING WORK TO BE BY LICENSED PRACTITIONERS.
* ALL WALLS & STRUCTURAL CHANGES BY GENERAL CONTRACTOR MUST BE NOTIFIED TO HOTWORX LLC.

REVISION

DATE	INITIAL

CONTACTS

Contact Development Team
HOTWORX Franchising
development@hotworx.net

PROJECT

Nicollet Center & Mall, Phase
HOTWORX STUDIO - MN0092
9 S. Nicollet Avenue
St. Paul, MN 55104
02-28-2024

HOTWORX.

SCALE
1/4" = 1'-0"

DATE
02/28/2024

DRAWN BY
DEBBIE T.

DRAWING TITLE
EXISTING & PROPOSED CONSTRUCTION PLAN

SHEET NO.
2 OF 8

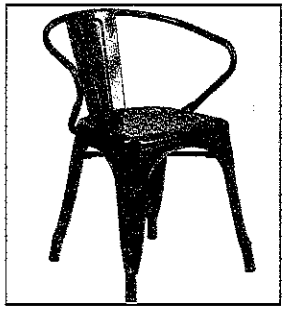

LOBBY FURNITURE:

–RED METAL INDOOR/OUTDOOR CHAIR WITH ARMS (CH–31270–RED–GG)– NEED 3 FOR EACH TABLE. ORDER FROM BIZCHAIR.COM

–TABLES WILL BE PROVIDED IN THE INTERIOR BRANDING COMPONENTS PACKAGE

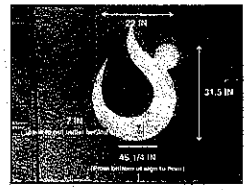

HOT–O SIGN:
*MOUNT HOT–O SIGN AT 46.25" A.F.F. TO BOTTOM OF SIGN. REQUIRES ELECTRICAL OUTLET LOCATED BEHIND SIGN.

Paint Schedule

General:

*Contractor shall provide a minimum of one primer coat, and two finish coats.

*All wall paint shall be Interior Latex – Satin finish

*All ceiling paint shall be Interior Latex – Satin finish

*Ceiling to be painted BLACK

*All doors, door frames and trim work shall be Interior Latex – Semi–Gloss

*All paint shall be Sherwin Williams brand, no substitutes will be accepted.

*Prepare all surfaces prior to painting

Product Type:

"SW7072 "ONLINE" – Demising walls, Front wall and Rear wall from finish floor up to ceiling. (Light Gray)

SW7074 "SOFTWARE" – Interior walls from floor to ceiling and interior of restrooms. (Dark Gray)

SW6868 "REAL RED" – Interior Doors and Door Frames and any Exposed HVAC Systems/Ductwork.

Paint all surface mounted conduit, pipes, columns, etc. to match the color of the wall.

Black paint for Ceiling and Ceiling Tiles.

DIVISION OF LABOR

ITEM	G.C.		OWNER		REMARKS
	FURN	INST	FURN	INST	
DEMOLITION	X	X			
ELECTRICAL SERVICE: EXTERIOR METER SECTION, INTERIOR LOAD CENTER, NECESSARY WIRING OUTLETS, & SWITCHES	X	X			
LIGHTING FIXTURES (PENDANT)		X	X		
HVAC SYSTEM(S)	X	X			
PLUMBING	X	X			
WATER HEATER	X	X			
RESTROOM FIXTURES & FLOORING	X	X			
DROP CEILING SYSTEM (IF APPLICABLE)	X	X			
PAINTING OF INTERIOR WALLS, DEMISING WALLS, DOORS, AND CEILING	X	X			
FLOORING (EXCEPT RESTROOMS)			X	X	
INTERIOR WALLS & DOORS	X	X			
RETAIL COMPONENTS/FIXTURES,			X	X	
SERVICE STAND			X	X	
FRAMES FOR ARTWORK AND SCHEDULE			X	X	
BASEBOARDS AND TRIM	X	X			
STORAGE CUBICLES AND BENCH SEATING			X	X	
WASHER & DRYER		X	X		
WATER FOUNTAINS	X	X			
COMPUTER EQUIPMENT, POS			X	X	
EXTERIOR/ INTERIOR SIGNAGE PACKAGE			X	X	
FLAT SCREEN TELEVISIONS			X	X	
HOTWORK SAUNAS ** WILL NEED ELECTRICIAN TO HARDWIRE UNITS AFTER INSTALL**		X	X	X	
CLEAN-UP & DUMPSTER FEES	X	X			

*1- EXTERIOR SIGNAGE TO BE INSTALLED BY LOCAL SIGN INSTALL CREW. ELECTRICIAN WILL NEED TO BE ON SITE IN ORDER TO COMPLETE SIGN INSTALL. ELECTRICAL CIRCUIT MUST BE IN PLACE. PROVIDED BY GC.

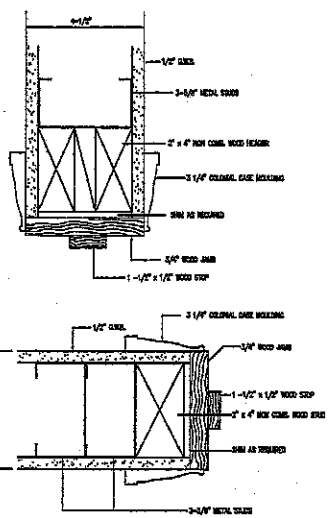

(A) TYPICAL WOOD DOOR HEADER/JAMB

(B) TYPICAL METAL DOOR HEADER/JAMB

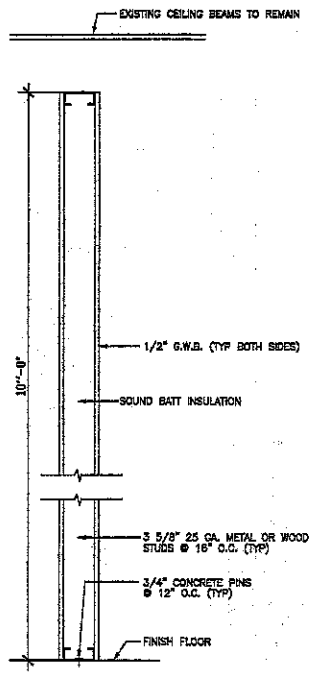

(A) TYPICAL WALL SECTION

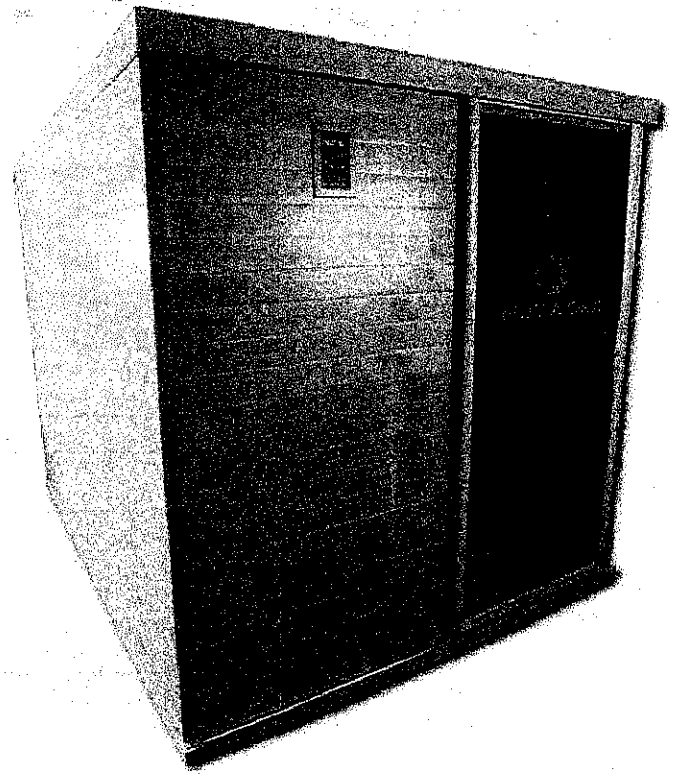

HOTWORX

ALL WORK SHALL BE PERFORMED BY CONTRACTORS THAT ARE LICENSED, BONDED, AND INSURED. ALL PLANS AND SPECIFICATIONS, DRAWINGS, PERMITS AND CLAIMS MUST BE SUBMITTED TO HOTWORX, LLC FOR APPROVAL PRIOR TO CONSTRUCTION. ALL CHANGES MUST BE APPROVED BY HOTWORX, LLC. ALL PLANS, SPECIFICATIONS, DRAWINGS, PERMITS, FEES, & ALL OTHER ITEMS NECESSARY TO COMPLETE THE PROJECT ARE THE RESPONSIBILITY OF THE GENERAL CONTRACTOR. ALL WORK MUST BE PERFORMED IN ACCORDANCE WITH ALL APPLICABLE LAWS, CODES, & REGULATIONS. ALL ELECTRICAL & PLUMBING WORK TO BE PERFORMED BY LICENSED CONTRACTORS. ALL WALLS SHOWN ARE NON-LOAD BEARING. ALL CHANGES, REVISIONS, & ADDITIONS MUST BE APPROVED BY HOTWORX, LLC.

REVISION

DATE	INITIAL

CONTACTS

Contact: Development Team
HOTWORX Franchising
development@hotworx.net

PROJECT

Natalia Gordon & Matt Davis
HOTWORX STUDIO - MN0052
455 Snelling Ave. N
St. Paul, MN 55104
02-28-2024

HOTWORX

SCALE
NOT TO SCALE

DATE
02/28/2024

DRAWN BY
DEBBIE T.

DRAWING TITLE
DETAILS & SCHEDULES

SHEET NO.
3 OF 8

FX ZONE NOTE:
*ELECTRICAL LAYOUT FOR FX ZONE TO BE REVIEWED WITH BRANDING VENDOR AND MAY REQUIRE RELOCATION TO CONFORM WITH BRANDING VENDORS DESIGN PRIOR TO INSTALLATION OF ELECTRICAL OUTLETS.

MOUNT HOT-O OUTLET AT 48¾" AFF TO CENTER LINE OF OUTLET. REFER SHEET 03 DETAIL AND SCHEDULES FOR SIGN INFORMATION

110V OUTLET FOR 32" TV WITH COUNTDOWN TIMER MOUNTED AT 7'-0" AFF TO BOTTOM OF OUTLET. COORDINATE PLACEMENT WITH BRANDING VENDOR OF CHOICE PRIOR TO INSTALLATION OF ELECTRICAL OUTLET

110V OUTLET FOR 50" TV WITH SILENT TRAINER MOUNTED AT 7'-0" AFF TO BOTTOM OF OUTLET. COORDINATE PLACEMENT WITH BRANDING VENDOR OF CHOICE PRIOR TO INSTALLATION OF ELECTRICAL OUTLET

NOTE:
STUB IN ELECTRICAL, PHONE & DATA PRIOR TO INSTALLING DECORATIVE WALL PANELS. COORDINATE PLACEMENT WITH BRANDING VENDOR OF CHOICE PRIOR TO ELECTRICAL OUTLET

SUPPLY INTERNET, PHONE AND POWER TO SERVICE STAND TO BE RECESSED IN SLAB. COORDINATE LOCATION OF SERVICE STATION WITH OWNER PRIOR TO LOCATION OF RECESSED OUTLETS

110V OUTLET FOR 65" FLAT SCREEN TV WITH LOBBY SCHEDULE @ 7'-6" AFF TO CENTER LINE OF OUTLET

LOCATE 208V BOX AT 8'-0" AFF FOR HOTWORX (TYP)

110/120V SERVICE FOR EXCEL HAND DRYER

110V OUTLET @ STANDARD HEIGHT FOR WATER FOUNTAIN CHILLER

110V OUTLET FOR VENDING MACHINE MOUNTED AT STANDARD HEIGHT

110V/208V SERVICE FOR WASHER & DRYER

208V OUTLET FOR WATER HEATER ABOVE

MIN. TWO(2) 110V QUADPLEX OUTLET @ 48" A.F.F. FOR SECURITY AND TELECOM EQUIPMENT LOCATED ON PLYWOOD BACKBOARD

110V OUTLET FOR 75" FLAT SCREEN TV WITH FRANCHISE VIDEO @ 7'-6" AFF TO CENTER LINE OF OUTLET. COORDINATE PLACEMENT WITH BRANDING VENDOR OF CHOICE PRIOR TO INSTALLATION OF ELECTRICAL OUTLET

110V OUTLET FOR HOTWORX TV @ 8'-0" AFF (TYP)

110V OUTLET FOR HOTWORX TV @ 8'-0" AFF (TYP)

LOCATE 208V BOX AT 8'-0" AFF FOR HOTWORX (TYP)

PROPOSED ELECTRICAL PLAN
SCALE 1/4"=1'-0"

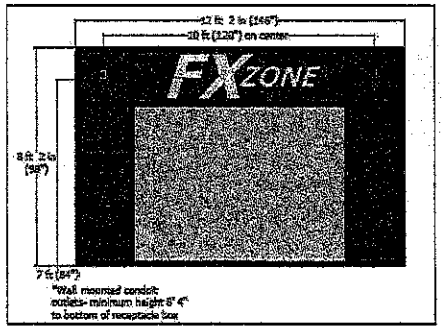

(1)FX ZONE WOOD PANEL GRID WITH 1 MIRROR

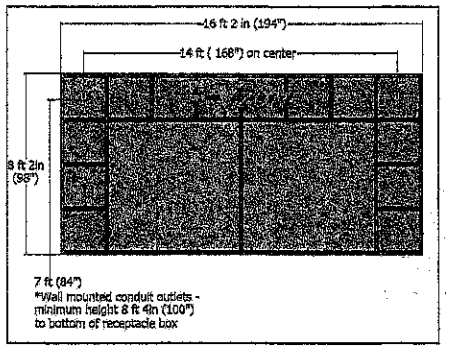

(1)FX ZONE WOOD PANEL GRID WITH 2 MIRRORS

NOTE:
*ALL ELECTRICAL OUTLET THAT IS LOCATED ON OR NEAR GRID WALL TO BE COORDINATED WITH BRANDING VENDOR OF CHOICE PRIOR TO INSTALLATION. (REFER POWER NOTES)
*FLAT SCREEN TV ELECTRICAL OUTLET TO BE LOCATED BEHIND TV. (REFER POWER NOTES)

POWER LEGEND

- 110V DUPLEX FLUSH FLOOR BOX
- 110V DUPLEX RECEPTACLE
- 208 VOLT DUPLEX RECEPTACLE
- 208 VOLT SERVICE FOR HOTWORX SAUNA **WILL NEED BUCKBOOSTER TO BOOST UP TO 240 VOLTS
- FLUSH FLOOR BOX FOR: HARDWIRED INTERNET SERVICE PHONE SERVICE
- 110V QUADPLEX RECEPTACLE

POWER NOTES

1) ELECTRICAL CONTRACTOR SHALL COMPLY WITH ALL APPLICABLE STATE AND LOCAL CODES, RULES, AND REGULATIONS.
2) ELECTRICAL CONTRACTOR IS RESPONSIBLE FOR VERIFYING THAT ALL CIRCUITS ARE PROPERLY LOADED.
3) ELECT. CONTRACTOR SHALL COORDINATE WITH HVAC CONTRACTOR FOR ALL PHASING REQUIREMENTS.
4) ALL WIRING TO BE INSTALLED IN TYPE MC CABLE.
5) SAUNAS REQUIRE TWO HOTS AND ONE GROUND. NEUTRAL IS NOT REQUIRED.
6) OUTLETS FOR POWER, PHONE OR DATA SHALL BE INSTALLED A MINIMUM OF 15" A.F.F.
7) SWITCHES AND ALL OTHER CONTROLS SHALL BE INSTALLED 36"-48" A.F.F.
8) LIMIT THE NUMBER OF OUTLETS PER CIRCUIT AS PER THE FOLLOWING:
   MAXIMUM 4 PER 15 AMP CIRCUIT
   MAXIMUM 6 PER 20 AMP CIRCUIT
9) CONVENIENCE OUTLETS TO BE MOUNTED AT 18" A.F.F. UNLESS OTHERWISE NOTED.
10) PROVIDE 110V POWER FOR EMERGENCY CALL BUTTON. LOCATION TO BE DETERMINED BY OWNER.
11) OPTIONAL: PROVIDE OUTLET FOR DOOR BELL FRONT AND BACK OF BUILDING. LOCATION TO BE DETERMINED BY OWNER.
12) FLAT SCREEN TV ELECTRICAL OUTLET TO BE LOCATED BEHIND TV. FRANCHISEE/CONTRACTOR TO COORDINATE PLACEMENT WITH BRANDING VENDOR OF CHOICE PRIOR TO INSTALLATION.
13) ELECTRICAL OUTLET ON OR NEAR ALL GRID WALLS TO BE COORDINATED WITH BRANDING VENDOR OF CHOICE PRIOR TO INSTALLATION AND MAY REQUIRE RELOCATION TO CONFORM WITH BRANDING VENDORS DESIGN.
14) IF SURFACE MOUNTED CONDUIT IS USED, IT MUST BE MOUNTED ABOVE THE GRID WALL AT 100" A.F.F. TO BOTTOM OF RECEPTACLE BOX. COORDINATE WITH BRANDING VENDOR OF CHOICE.

EQUIPMENT LEGEND

HOTWORX INFRARED SAUNA– 240 volt SINGLE PHASE, 35 amps, **unit is HARDWIRED** HEAT LOAD 20713.675 BTU/HR
**NOTE: Usually a buck booster is required to get to the 240 volts. Electrician to verify existing line voltage before ordering buckbooster

HOTWORX TV– standard 110 outlet mounted at 8' AFF

Vending machine– dedicated 110 outlet

Computer– dedicated 110 volt outlet

Washer– dedicated 110 volt outlet GFI

Dryer– dedicated 208V volt outlet

EXCEL Hand Dryers (model #TA-SB)– 110/120V, 15 or 20 amp

Water fountain chiller– dedicated 110 volt outlet GFI

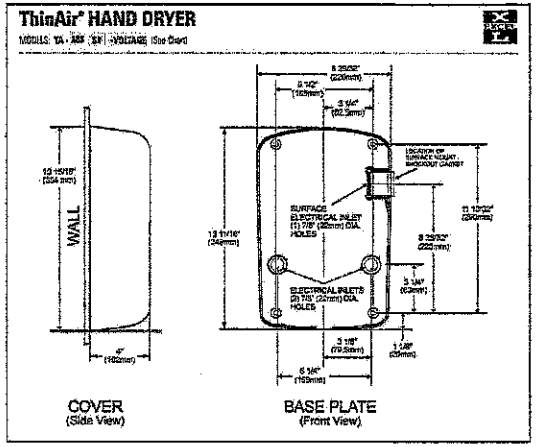

IMAGES OF THE ELECTRICAL DISCONNECTS AND BUCKBOOSTERS BETWEEN EVERY TWO SAUNAS AS WELL AS THE 110 OUTLET FOR THE TVS, ALL MOUNTED AT 8' AFF

NOTE:–Depending on the local code requirements within your municipality, your electrician may need to install a custom power cord that is hardwired to the sauna and has to be at least an 8 gauge wire with flex metal encasing or conduit.

HOTWORX

ALL DRAWINGS ARE PROPERTY OF HOTWORX LLC. THE PURPOSE OF SPACE ALLOCATION, LAYOUT, CONTRACT DOCUMENTS, SPECIFICATIONS, DRAWINGS, PLANS, AND NOTES IS TO ENSURE THE SUCCESSFUL INSTALLATION OF HOTWORX EQUIPMENT. ALL ELECTRICAL & PLUMBING WORK TO BE BY LICENSED PROFESSIONALS.
* ALL DIMENSIONS ARE ESTIMATE. CONTACT HOTWORX LLC FOR ACTUAL DIMENSIONS.
* ALL DIMENSIONS, SPECIFICATIONS, CHANGES BY OWNER, CONTRACTOR, AND/OR ARCHITECT TO BE REVIEWED BY HOTWORX LLC.

REVISION

DATE	INIT'L

CONTACTS

Contact Development Team
HOTWORX Franchising
development@hotworx.net

PROJECT

Natalie Gardens & Multi Onsite
HOTWORX SAUNA - WK0092
431 Southlake Blvd N
St. Paul MN 55104
02-28-2024

HOTWORX

SCALE
1/4" = 1'-0"

DATE
02/28/2024

DRAWN BY
DEBBIE T.

DRAWING TITLE
PROPOSED ELECTRICAL PLAN

SHEET NO.
4 OF 8

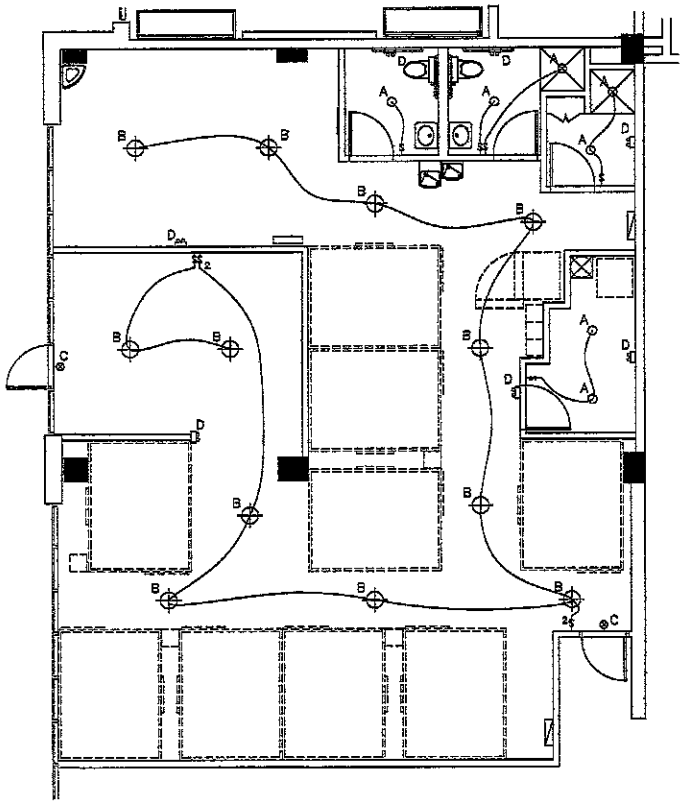

PROPOSED LIGHTING PLAN
SCALE 1/4"=1'-0"

LIGHTING SCHEDULE

A	6" LED RECESSED DOWN LIGHT
B	HOTWORX FIXTURE: 60W LED UFO HIGH BAY LIGHT 6800LM 5000K IP65 WATERPROOF INDUSTRIAL WAREHOUSE HANGING LIGHT BY HYKOLITY. OPTIMAL HEIGHT 144" A.F.F.
C	LED EXIT SIGN
D	EMERGENCY LIGHT

NOTES:

**WHEN ORDERING YOUR LIGHTING PACKAGE IT IS CRITICAL TO SPECIFY CEILING HEIGHT AND TYPE WITH LIGHTING VENDOR.

**ELECTRICIAN TO PROVIDE ALL EXIT & EMERGENCY LIGHTING AS REQUIRED BY CODE.

**ANY 2'X2' OR 2'X4 LIGHTING FIXTURES TO BE REMOVED

**UFO LIGHTS (FIXTURE "B") TO BE HUNG BY CHAIN AT 12' AFF IF POSSIBLE

**THE UFO LIGHTS (FIXTURE "B") COME AS PART OF THE INTERIOR BRANDING PACKAGE FROM CINEMATION DESIGN BUT YOU WILL NEED YOUR ELECTRICIAN TO HANG THEM. PLEASE CONTACT JOE MILLER AT CINEMATION DESIGN (817)-217-8241, WHEN YOU ARE READY FOR YOUR LIGHTS.

HOTWORX FIXTURE TYPE "B"

60W LED UFO HIGH BAY LIGHT 6800LM 5000K IP65 WATERPROOF INDUSTRIAL WAREHOUSE HANGING LIGHT BY HYKOLITY

OPTIMAL HEIGHT – 144" AFF

HOTWORX

ALL WORK MUST BE PERFORMED BY A LICENSED CONTRACTOR
* ALL WORK TO BE IN ACCORDANCE WITH NFPA 70 NATIONAL ELECTRICAL CODE, NATIONAL FIRE ALARM AND SIGNALING CODE, NFPA 101 LIFE SAFETY CODE, NFPA 72 NATIONAL FIRE ALARM CODE, NFPA 90A STANDARD FOR THE INSTALLATION OF AIR CONDITIONING AND VENTILATING SYSTEMS, NFPA 96 STANDARD FOR VENTILATION CONTROL AND FIRE PROTECTION OF COMMERCIAL COOKING OPERATIONS, NFPA 99 HEALTH CARE FACILITIES, NFPA 101 LIFE SAFETY CODE, NFPA 102 STANDARD FOR GRANDSTANDS, TENTS, AND MEMBRANE STRUCTURES, NFPA 105 STANDARD FOR SMOKE DOOR ASSEMBLIES AND OTHER DEVICES, NFPA 110 STANDARD FOR EMERGENCY AND STANDBY POWER SYSTEMS, NFPA 111 STANDARD ON STORED ELECTRICAL ENERGY EMERGENCY AND STANDBY POWER SYSTEMS, NFPA 1 FIRE CODE, NFPA 2 HYDROGEN TECHNOLOGIES CODE, NFPA 30 FLAMMABLE AND COMBUSTIBLE LIQUIDS CODE, NFPA 30A CODE FOR MOTOR FUEL DISPENSING FACILITIES AND REPAIR GARAGES, NFPA 30B CODE FOR THE MANUFACTURE AND STORAGE OF AEROSOL PRODUCTS, NFPA 54 NATIONAL FUEL GAS CODE, NFPA 58 LIQUEFIED PETROLEUM GAS CODE, NFPA 70B RECOMMENDED PRACTICE FOR ELECTRICAL EQUIPMENT MAINTENANCE, NFPA 70E STANDARD FOR ELECTRICAL SAFETY IN THE WORKPLACE, NFPA 72 NATIONAL FIRE ALARM AND SIGNALING CODE, NFPA 80 STANDARD FOR FIRE DOORS AND OTHER OPENINGS PROTECTIVES

NOTE: INTERNET, PHONE AND POWER TO SERVICE STAND TO BE RECESSED IN SLAB. COORDINATE LOCATION OF SERVICE STATION WITH OWNER PRIOR TO LOCATION OF RECESSED OUTLETS

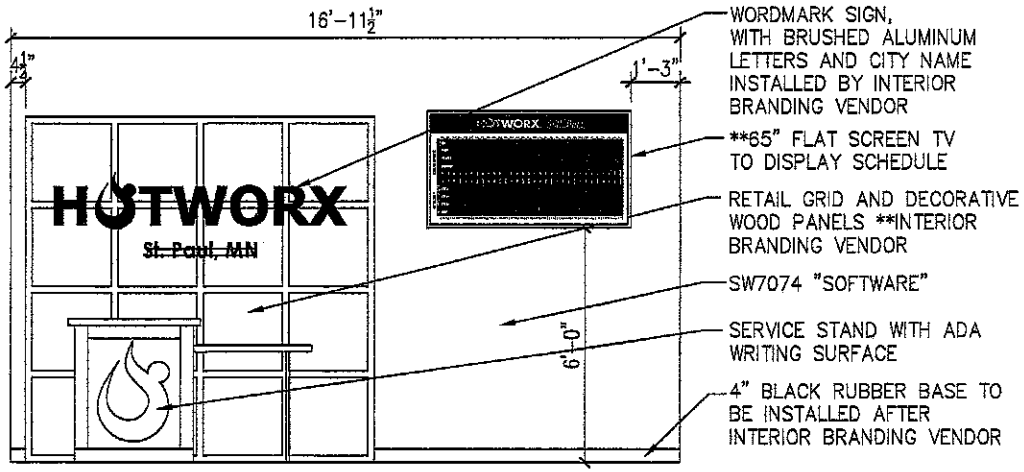

(A)- Service stand wall elevation

NOTE: ELECTRICAL OUTLET TO BE LOCATED BEHIND FLAT SCREEN TV. COORDINATE WITH BRANDING VENDOR OF CHOICE.

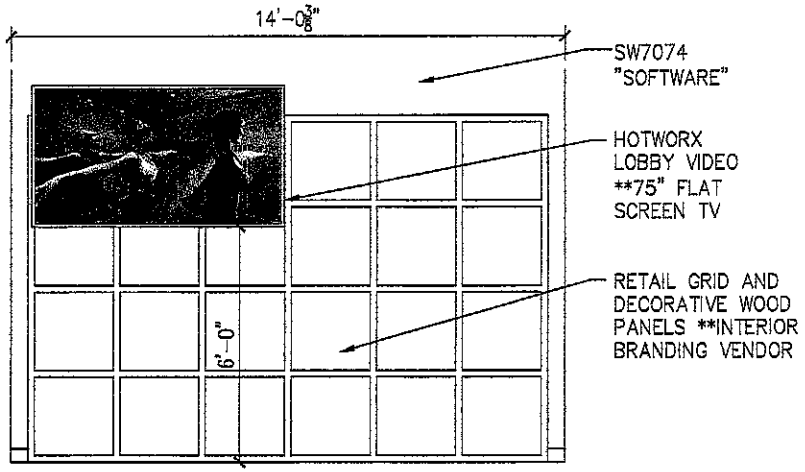

(B)- Retail wall elevation

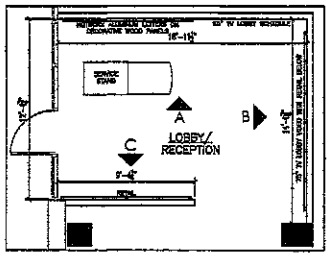

Paint Schedule

General:

*Contractor shall provide a minimum of one primer coat, and two finish coats.

*All wall paint shall be Interior Latex – Satin finish

*All ceiling paint shall be Interior Latex – Satin finish

*Ceiling to be painted BLACK

*All doors, door frames and trim work shall be Interior Latex – Semi-Gloss

*All paint shall be Sherwin Williams brand, no substitutes will be accepted.

*Prepare all surfaces prior to painting

Product Type:

SW7072 "ONLINE" – Demising walls, Front wall and Rear wall from finish floor up to ceiling. (Light Gray)

SW7074 "SOFTWARE" – Interior walls from floor to ceiling and interior of restrooms. (Dark Gray)

SW6868 "REAL RED" – Interior Doors and Door Frames and any Exposed HVAC Systems/Ductwork.

Paint all surface mounted conduit, pipes, columns, etc. to match the color of the wall.

Black paint for Ceiling and Ceiling Tiles.

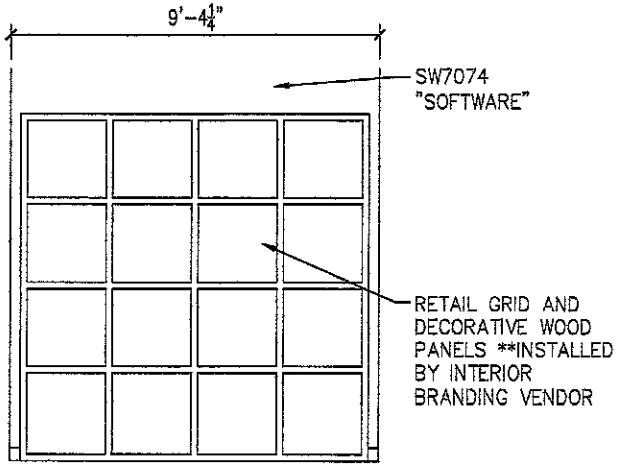

(C)- Retail wall elevation

NOTE:
ELEVATIONS ARE REPRESENTATIONAL OF PROPOSED LAY-OUT.
CONTRACTOR/FRANCHISEE TO VERIFY WITH BRANDING VENDOR OF CHOICE AS SOME GRID SIZES MAY VARY DUE TO MANUFACTURING/ SHIPPING RESTRAINTS.
IT IS CRITICAL FOR CONTRACTOR/FRANCHISEE TO VERIFY THE EXACT PLACEMENT OF ALL ELECTRICAL OUTLETS LOCATED WITHIN OR NEAR GRIDWALLS.

HOTWORX

ALL DRAWINGS ARE PROPERTY OF THE COMPANY FOR THE PURPOSE OF SPACE ALLOCATION. HOTWORX LLC NOTES ALL DIMENSIONS, ELEVATIONS, MATERIALS, ALL MECHANICAL, ELECTRICAL, PLUMBING, WIRING, ALL STRUCTURAL, FIRE PROTECTION, AND ALL OTHER DISCIPLINES TO BE VERIFIED BY LICENSED PROFESSIONALS IN THE RESPECTIVE DISCIPLINES.
* ALL WORK MUST BE PERFORMED BY LICENSED & INSURED PROFESSIONALS.
* ALL ELECTRICAL & PLUMBING WORK TO BE PERFORMED BY LICENSED PROFESSIONALS.
* ALL DIMENSIONS, DRAWINGS, DETAILS, COMMENTS, CONTRACTOR MUST BE NOTIFIED TO HOTWORX LLC.

REVISION

DATE	INITIL

CONTACTS

Contact Development Team
HOTWORX Franchising
development@hotworx.net

PROJECT

Natalie Gordon & Mark Davis
HOTWORX SILVER – MN0032
451 Snelling Ave N
St. Paul, MN 55104
02-28-2024

HOTWORX

SCALE
NOT TO SCALE

DATE
02/28/2024

DRAWN BY
DEBBIE T.

DRAWING TITLE
INTERIOR LOBBY ELEVATIONS

SHEET NO.
6 OF 8

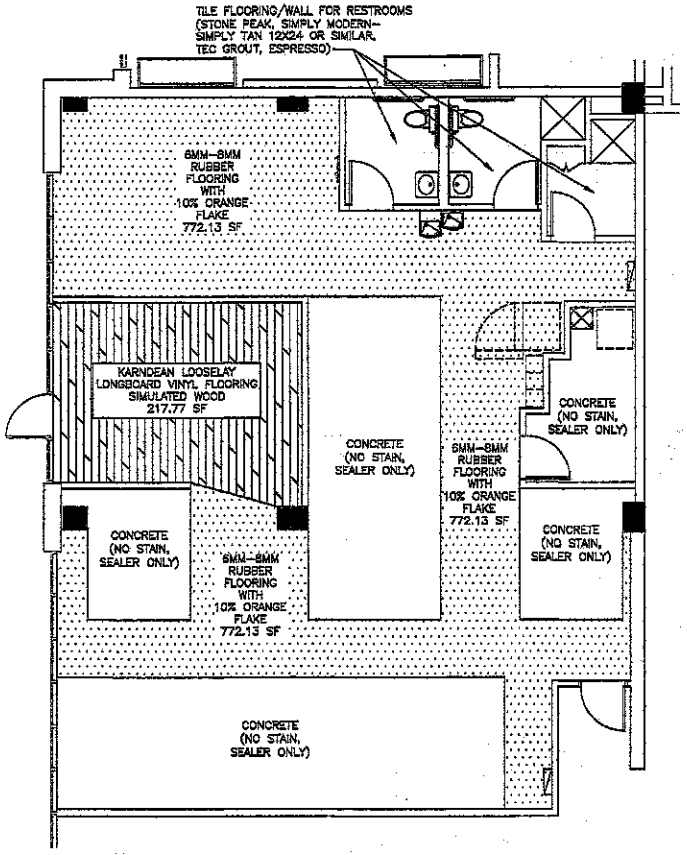

PROPOSED FLOORING PLAN
SCALE 1/4"=1'–0"

**NOTE:
APPROXIMATE FOOTAGE OF FLOORING:
* VINYL SIMULATED WOOD: 217.77 S.F.
* RUBBER FLOORING: 772.13 S.F.

**NOTE– ALL CONCRETE MUST BE LEVELED, PREPPED, AND SEALED BY CONTRACTOR BEFORE INTERIOR BRANDING COMPONENTS VENDOR CREW DOES THE INSTALL

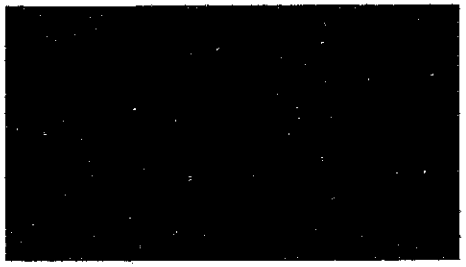

6MM–8MM RUBBER FLOORING WITH 10% ORANGE FLAKE
** PROVIDED AND INSTALLED BY INTERIOR BRANDING COMPONENTS VENDOR

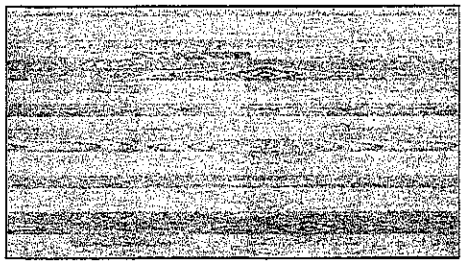

KARNDEAN LOOSELAY LONGBOARD VINYL FLOORING– SIMULATED WOOD
**PROVIDED AND INSTALLED BY INTERIOR BRANDING COMPONENTS VENDOR

HOTWORX

ALL DIMENSIONS PROVIDED TO THE OFFICE OF HOTWORX/OWNER/OPERATOR BY ARCHITECT OR MECHANICAL PLAN AND CLAIMING NO RESPONSIBILITY FOR ACCURACY OR ACCEPTANCE. ALL DIMENSIONS TO BE VERIFIED BY CONTRACTOR. ALL WORK TO BE PERFORMED IN ACCORDANCE WITH ALL APPLICABLE CODES, LAWS, REGULATIONS, ORDINANCES, STATE, FEDERAL AND LOCAL. CONTRACTOR TO VERIFY ALL MEASUREMENTS PRIOR TO ANY PURCHASE OR CONSTRUCTION.
* ALL ELECTRICAL & PLUMBING WORK TO BE BY LICENSED CONTRACTOR.
* ALL WALLS & SIDEWALKS DAMAGED BY CONTRACTOR, CONTRACTOR MUST BE NOTIFIED TO HOTWORX LLC

REVISION

DATE	INIT'L

CONTACTS

Contact Development Team
HOTWORX Franchising
development@hotworx.net

PROJECT

Natalie Gordon & Matt Davis
HOTWORX STUDIO - MN0092
433 Snelling Ave N
St. Paul, MN 55104
02-28-2024

HOTWORX.

SCALE
1/4" = 1'-0"

DATE
02/28/2024

DRAWN BY
DEBBIE T.

DRAWING TITLE
PROPOSED FLOORING PLAN

SHEET NO.
7 OF 8

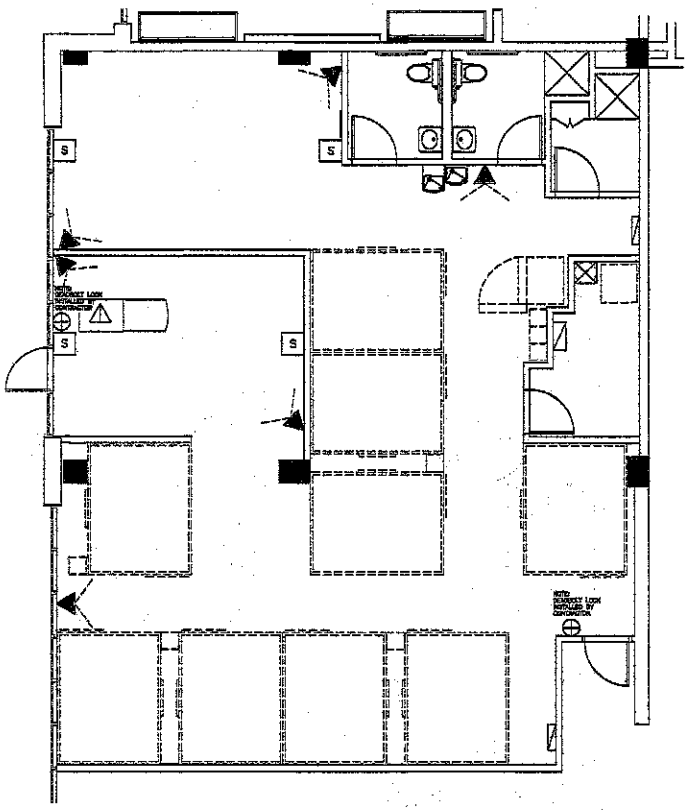

PROPOSED SECURITY/SOUND EQUIPMENT PLAN
SCALE 1/4"=1'-0"

SECURITY LEGEND

HEAD END EQUIPMENT (1)
- 4'x4' PLYWOOD BACKBOARD
- ELECTRICAL OUTLET BY BACKBOARD
- ISP ROUTER LOCATION
- ALL CONDUIT STUBBED ABOVE BACKBOARD FROM CAMERA LOCATIONS & ACCESS CONTROL DOOR.

ACCESS CONTROL DOOR (2)– 3/4" CONDUIT FROM BACKBOARD TO STUBBED INTO TOP OF DOORFRAME

CAMERA LOCATIONS (5)– SINGLE GANG BOXES 10' AFF WITH MIN 1/2" CONDUIT PER RUN STUBBED @ ABOVE BACKBOARD. 4 LOCATIONS TO BACKBOARD

ISP INSTALLED IN SERVICE STAND WILL NEED (1)– 3/4" MIN CONDUIT FROM INSIDE SERVICE STAND TO BACKBOARD. NOTE: THIS LOCATION IS NEEDED DUE TO LENGTH OF THE BUILDING FOR GOOD MIFI COVERAGE IN THE FRONT

Note:
Head End Equipment (1)
–4'x4' Plywood Backboard
–Electrical Outlet By Backboard
–ISP Router Location
–All Home Run EMT Conduit Stubbed Above Backboard From Camera Locations, Service Stand & Access Control Door.

Access Control Door (2) Home Run 3/4" EMT Conduit From Backboard To Single Gang Box Mounted At The Top Of Doorframe Mullion.

Camera Locations (5) Single Gang Boxes 10' AFF With Min 1/2" Home Run EMT Conduit Per Run Stubbed Above Backboard. Cameras have an approximate angle of view of 108 degrees. For more information contact security vendor.

Service Stand (1) Home Run 3/4" EMT Conduit From Backboard To Service Stand For Hardwired Data Lines For POS & Phone.

SECURITY LEGEND

S ROCKBOT SPEAKERS (4) PER LOCATION

**NOTE:
*SECURITY AND SOUND REQUIREMENTS ARE 250 MBPS

*AMP/CONTROLLER TO BE INSTALLED IN A SECURE LOCATION WITHOUT PUBLIC ACCESS. (TYPICALLY INSTALLED ADJACENT TO THE SECURITY BACKBOARD) FRANCHISEE TO VERIFY EXACT LOCATION

HOTWORX

ALL DRAWINGS ARE PROPERTY OF THE CONTRACTOR FOR THE PURPOSE OF BUILDING, HOTWORX LLC
NOTE: ALL DIMENSIONS, ELEVATIONS, LOCATIONS AND ALIGNMENTS ARE TO BE VERIFIED WITH ARCHITECT PRIOR TO CONSTRUCTION. ALL DRAWINGS, SPECIFICATIONS AND PLANS ARE THE PROPERTY OF HOTWORX LLC. ALL DRAWINGS, SPECIFICATIONS AND PLANS ARE TO BE RETURNED UPON REQUEST.
* ALL ELECTRICAL & PLUMBING WORK TO BE BY LICENSED TRADESMEN.
* ALL WORK TO BE IN ACCORDANCE WITH ALL MUNICIPAL CODES AND ORDINANCES.
* ALL DIMENSIONS, SUBSTITUTIONS, CHANGES TO BE REPORTED TO HOTWORX LLC

REVISION

DATE	INIT'L

CONTACTS

Contact Development Team
HOTWORX Franchising
development@hotworx.net

PROJECT

Natalia Gaston & Mark Flores
HOTWORX STUDIO - MN0092
494 Snelling Ave N
St. Paul, MN 55104
02-28-2024

HOTWORX.

SCALE
1/4" = 1'-0"

DATE
02/28/2024

DRAWN BY
DEBBIE T.

DRAWING TITLE
PROPOSED SECURITY/ SOUND PLAN

SHEET NO.
8 OF 8

HOTWORX